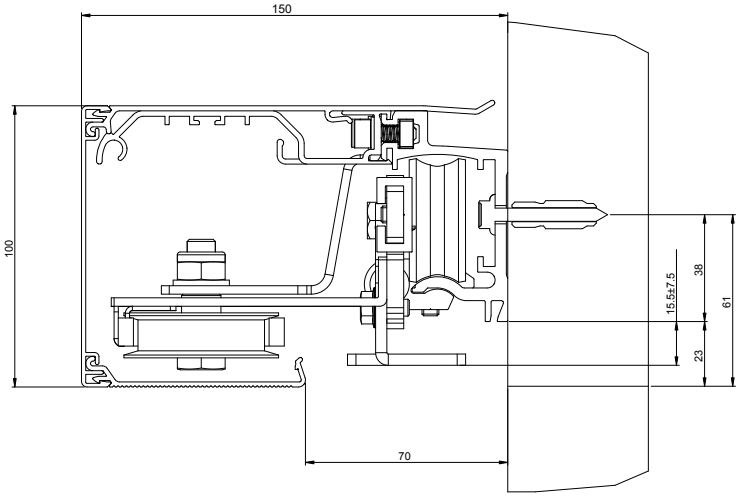
150
100
70
15.5±7.5
38
61
23